Parts Book

Engine

ТЕХПОРТАВТОСЕРВИС
группа компаний

A810201021318 Switch Valve Assembly

Page header with parts code, and parts description

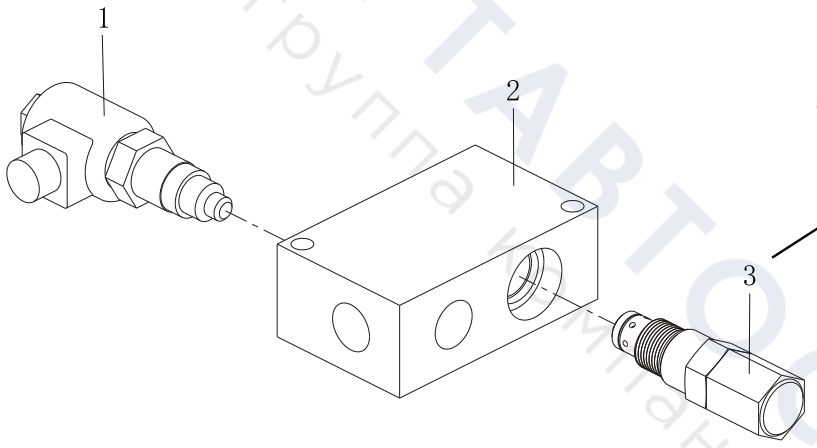

Line-art illustration with callout numbers

Page footer with page number, chapter title, machine model and product name

Table of Contents

Group 1 Engine **1-1**
160102010036A Engine 1-2

Group 2 Cylinder Body **2-1**
Cylinder Body 2-2

Group 3 Gear Chamber **3-1**
61009586 Gear Chamber 3-2

Group 4 Flywheel Case Oil Pan **4-1**
Flywheel Case Oil Pan 4-2

Group 5 Cylinder Head **5-1**
Cylinder Head 5-2

Group 6 Exhaust Manifold **6-1**
60279836 Exhaust Manifold 6-2

Group 7 Crankshaft Drive Gear **7-1**
Crankshaft Drive Gear 7-2

Group 8 Crankshaft Piston **8-1**
Crankshaft Piston 8-2

Group 9 Lubrication System **9-1**
Lubrication System 9-2

Group 10 Cooling System **10-1**
Cooling System 10-2

Group 11 Injection Pump **11-1**
Injection Pump 11-2

Group 12 Oil Level Regulator **12-1**
Oil Level Regulator 12-2

Group 13 Fuel Injection Valve **13-1**
Fuel Injection Valve 13-2

ТЕХНОРТАВТОСЕРВИС
Группа компаний

61009713 Fitting 13-4

Group 14 Fitting 14-1
61009713 Fitting 14-2

Group 15 Starting Motor Mechanism 15-1
Starting Motor Mechanism 15-2

Group 16 Generator 16-1
Generator 16-2

Group 17 Accessory 17-1
Accessory 17-2

Group 18 Overhaul Kit 18-1
160102010008B001 Overhaul Kit 18-2

ТЕХНОРТАВТОСЕРВИС
группа компаний

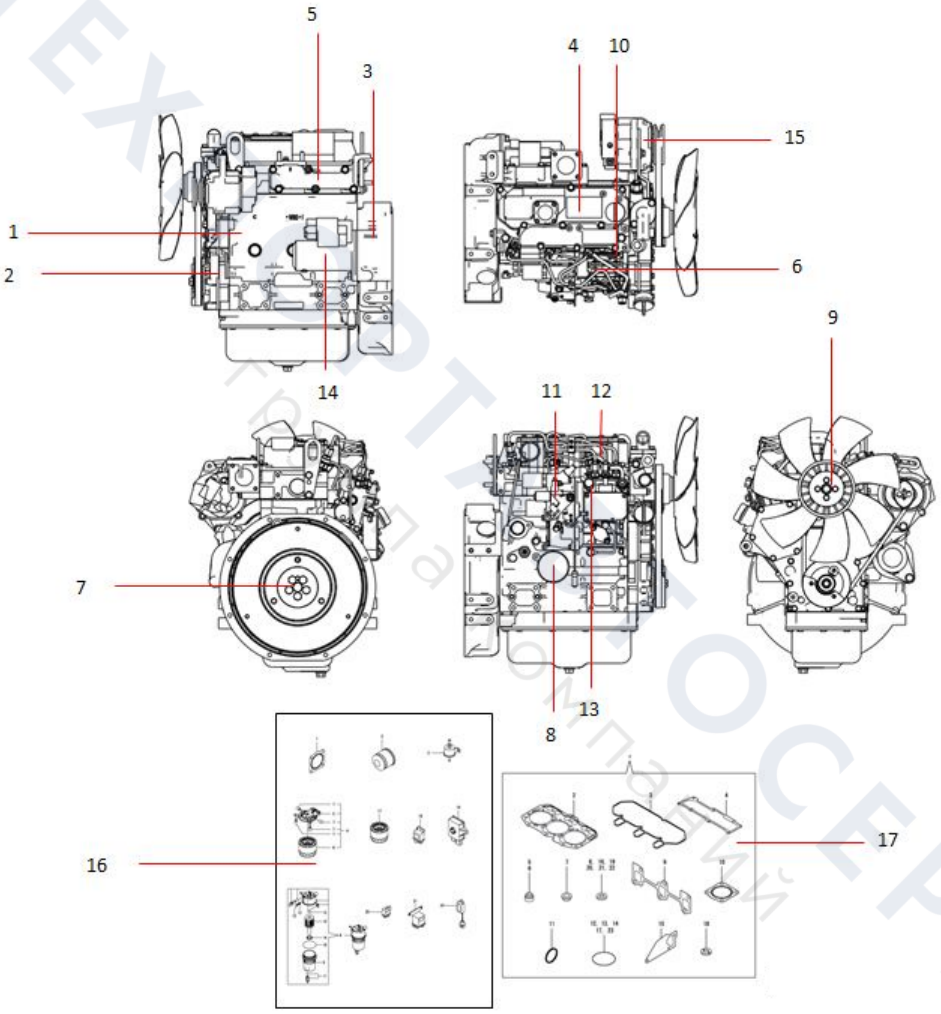
5
3
1
2
14
4
10
15
6
9
11
12
7
13
8
16
17

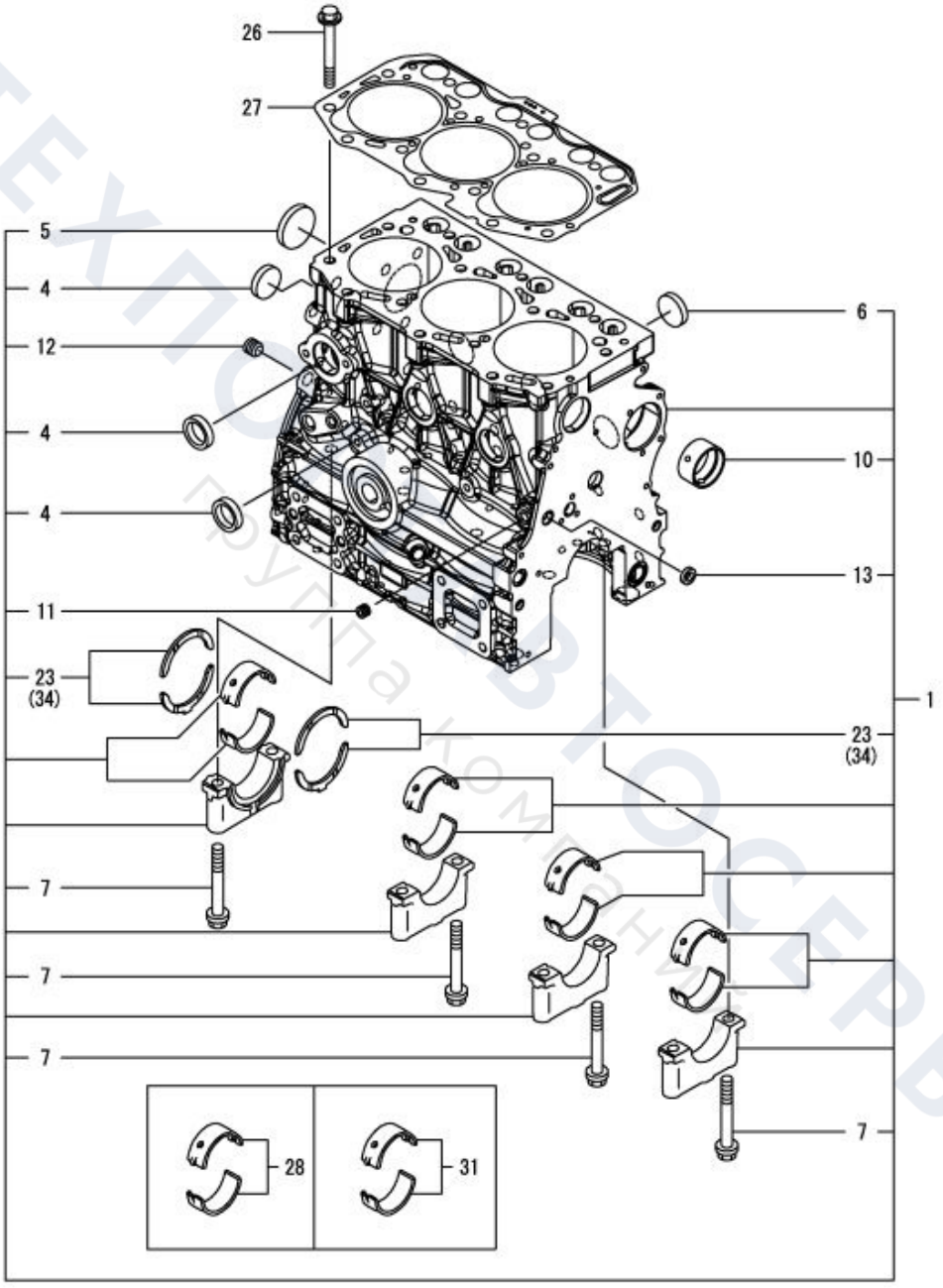
26
27
5
4
12
4
4
11
23
(34)
6
10
13
1
23
(34)
7
7
7
7
28
31

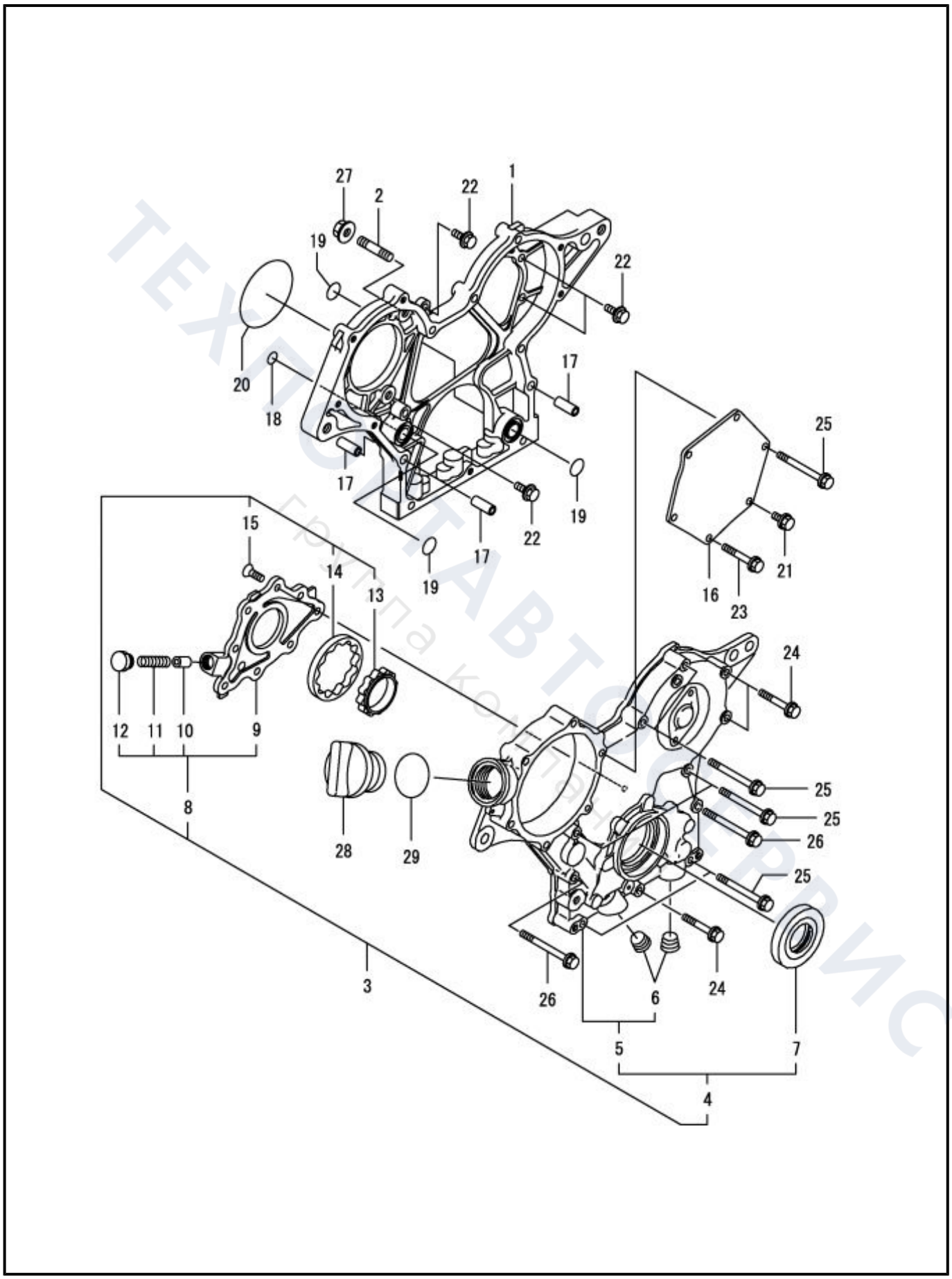
27
2
22
1
19
22
20
18
17
17
19
22
17
19
15
14
13
12
11
10
9
8
3
28
29
25
16
23
21
24
25
25
26
25
26
24
6
5
7
4

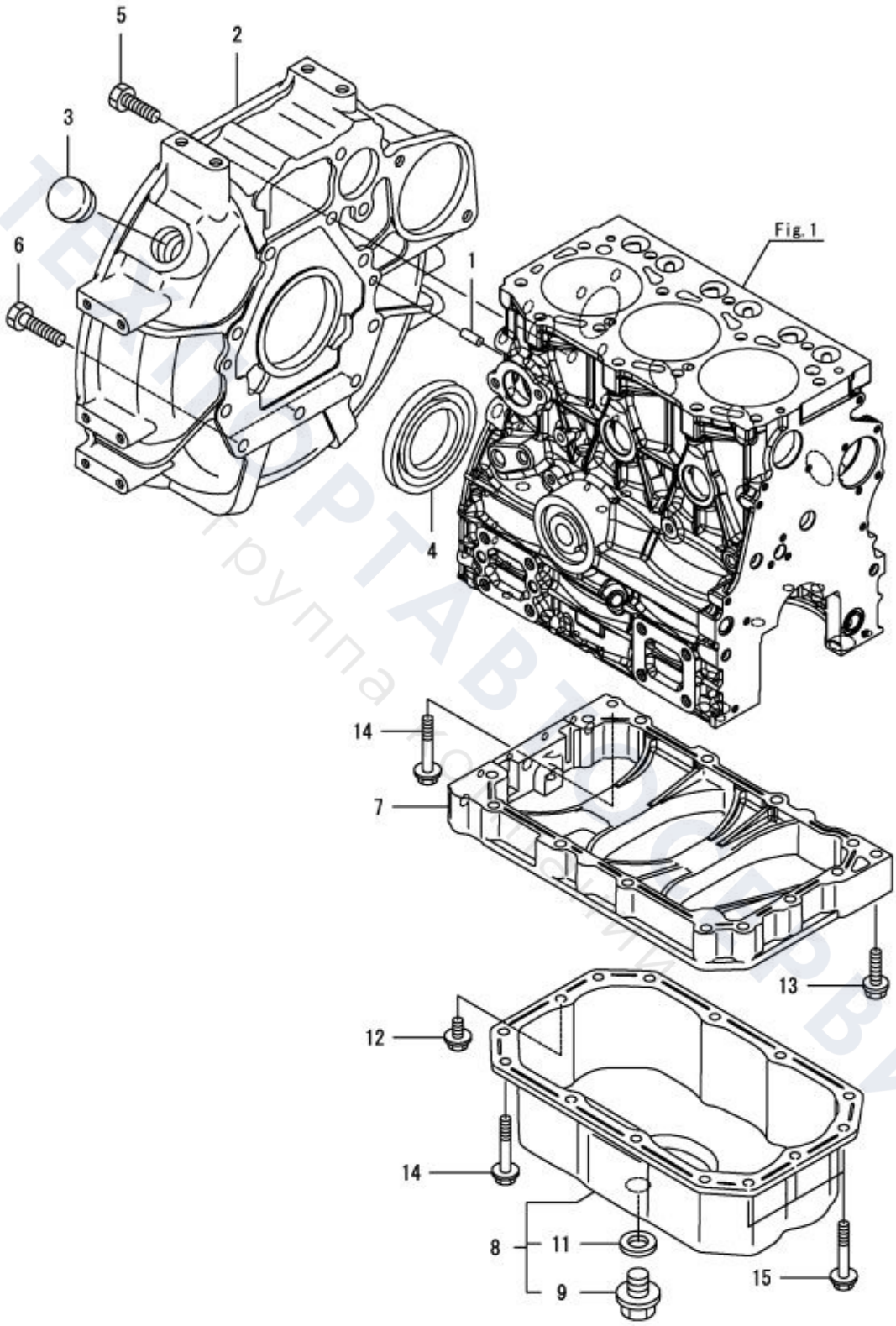
Fig. 1
1
2
3
4
5
6
7
8
9
11
12
13
14
14
15

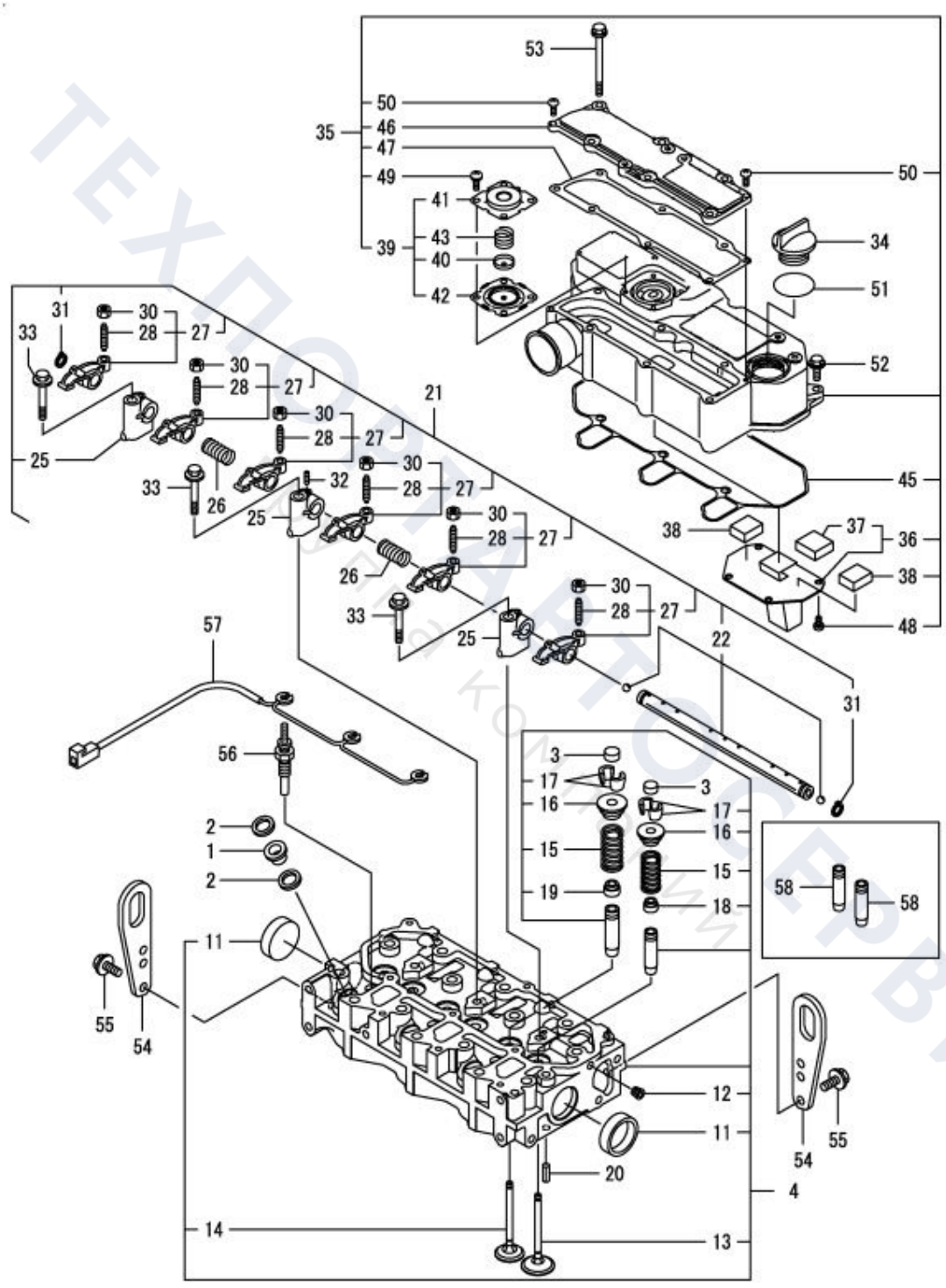
53
50
35
46
47
49
41
43
40
39
42
50
34
51
52
45
38
37
36
38
48
31
30
28
27
33
21
25
32
26
22
57
56
3
17
16
15
19
18
2
1
11
55
54
12
20
4
14
13
58

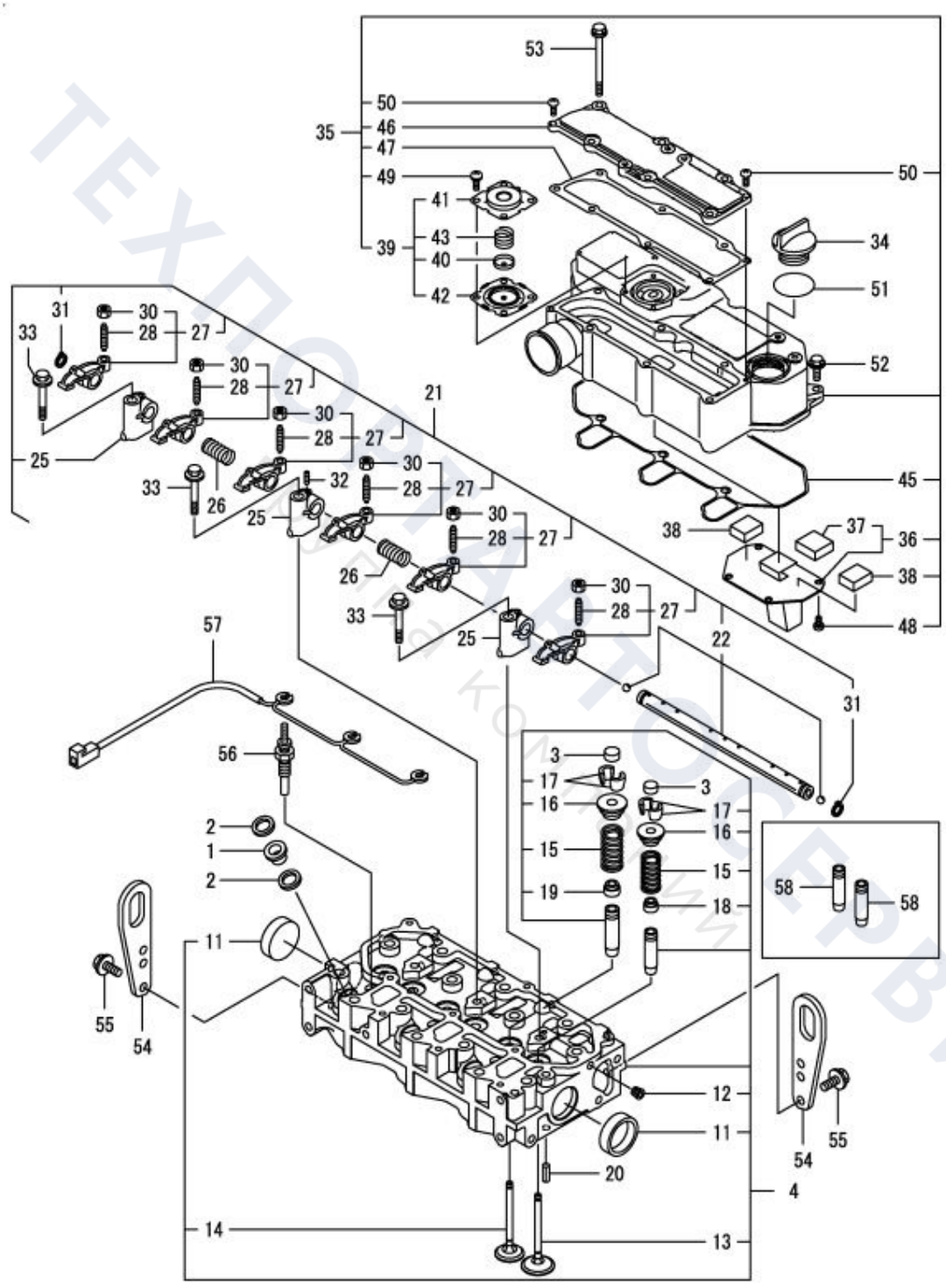
53
50
35
46
47
49
41
43
39
40
42
50
34
51
52
45
38
37
36
38
48
31
33
30
28
27
21
25
26
32
22
57
56
3
17
16
15
19
18
2
1
11
55
54
12
20
4
14
13
58

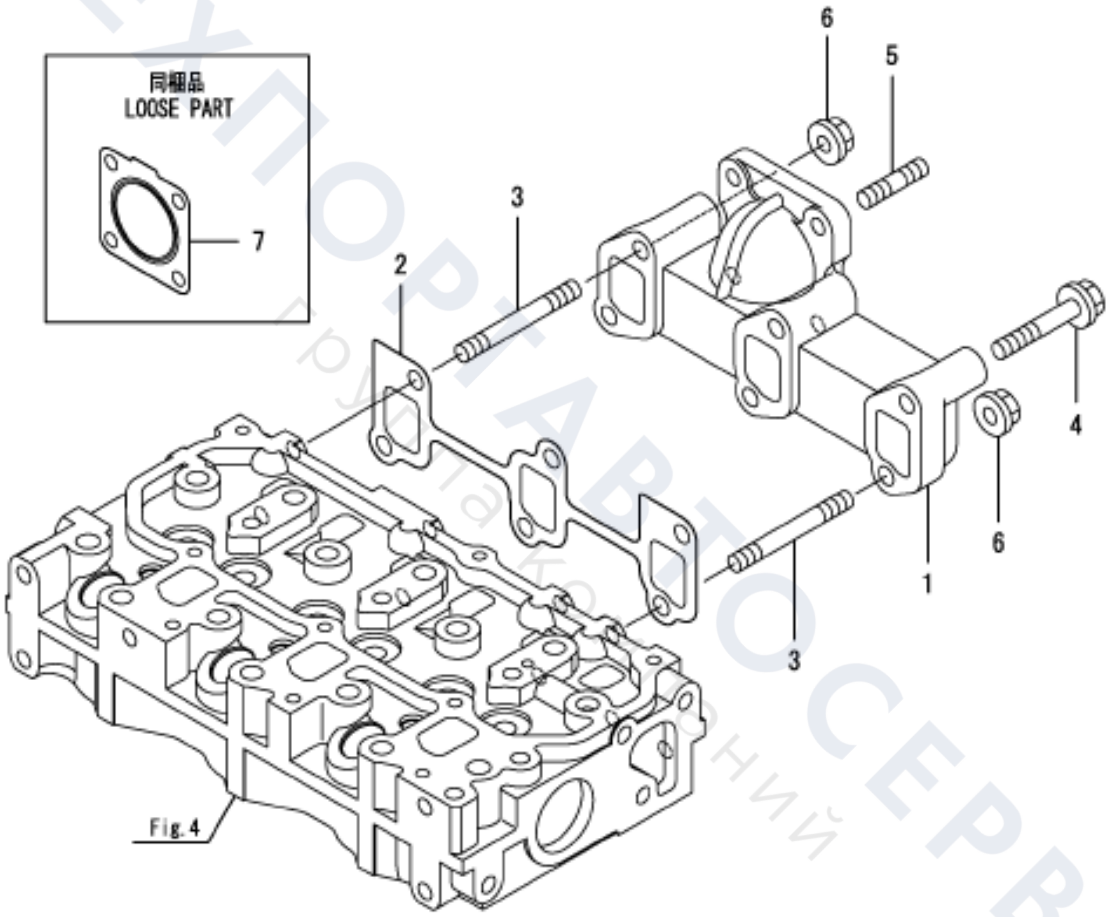

Fig. 4

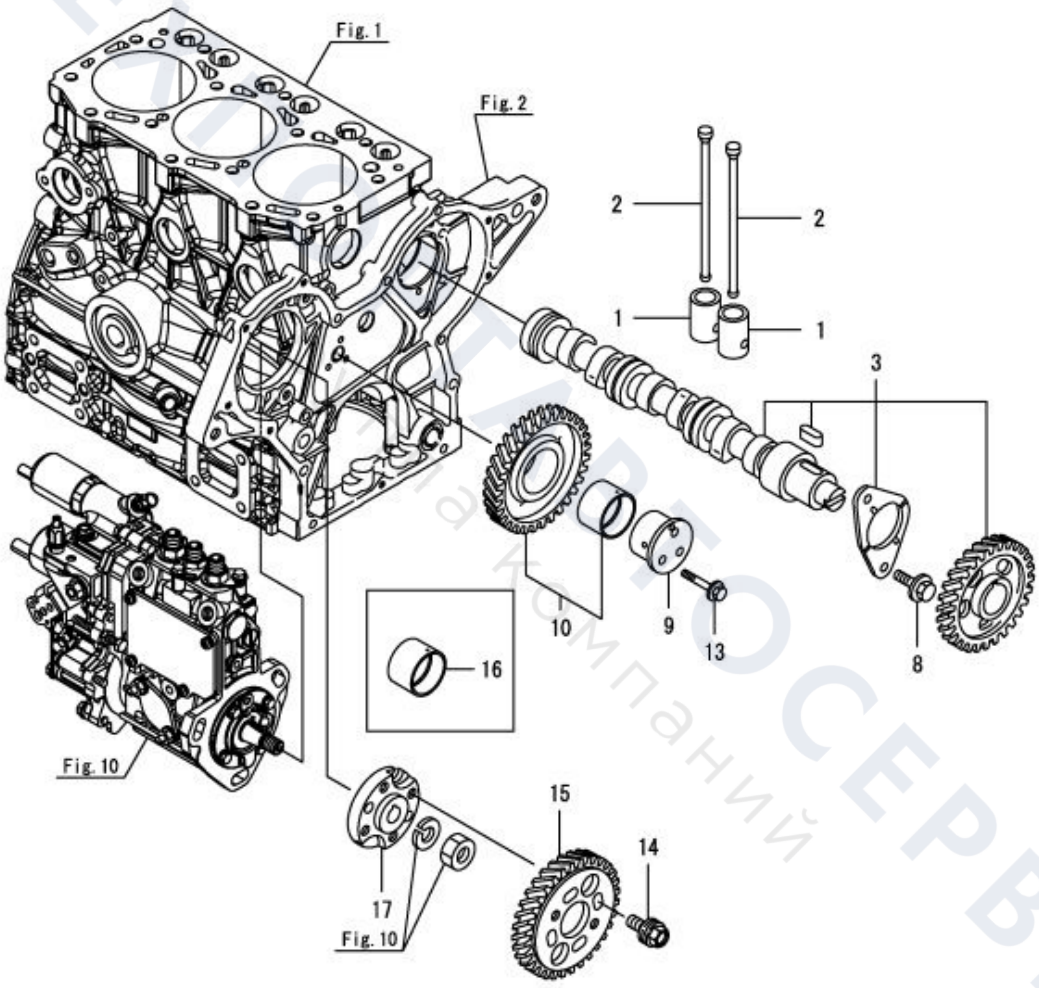
Fig. 1
Fig. 2
2
2
1
1
3
10
9
13
8
16
Fig. 10
15
14
17
Fig. 10

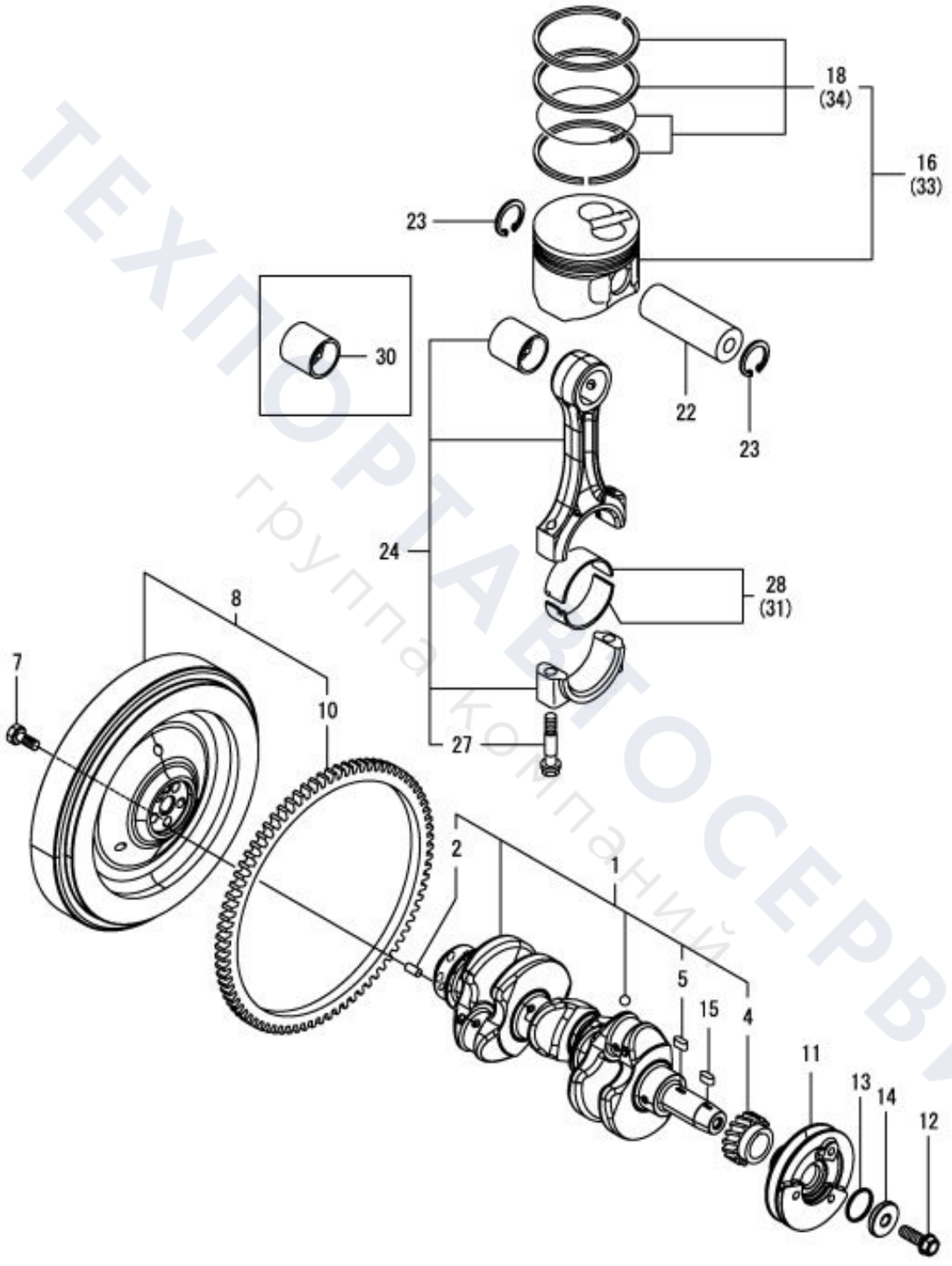

ТЕХПОРТАВТОСЕРВИС
группа компаний

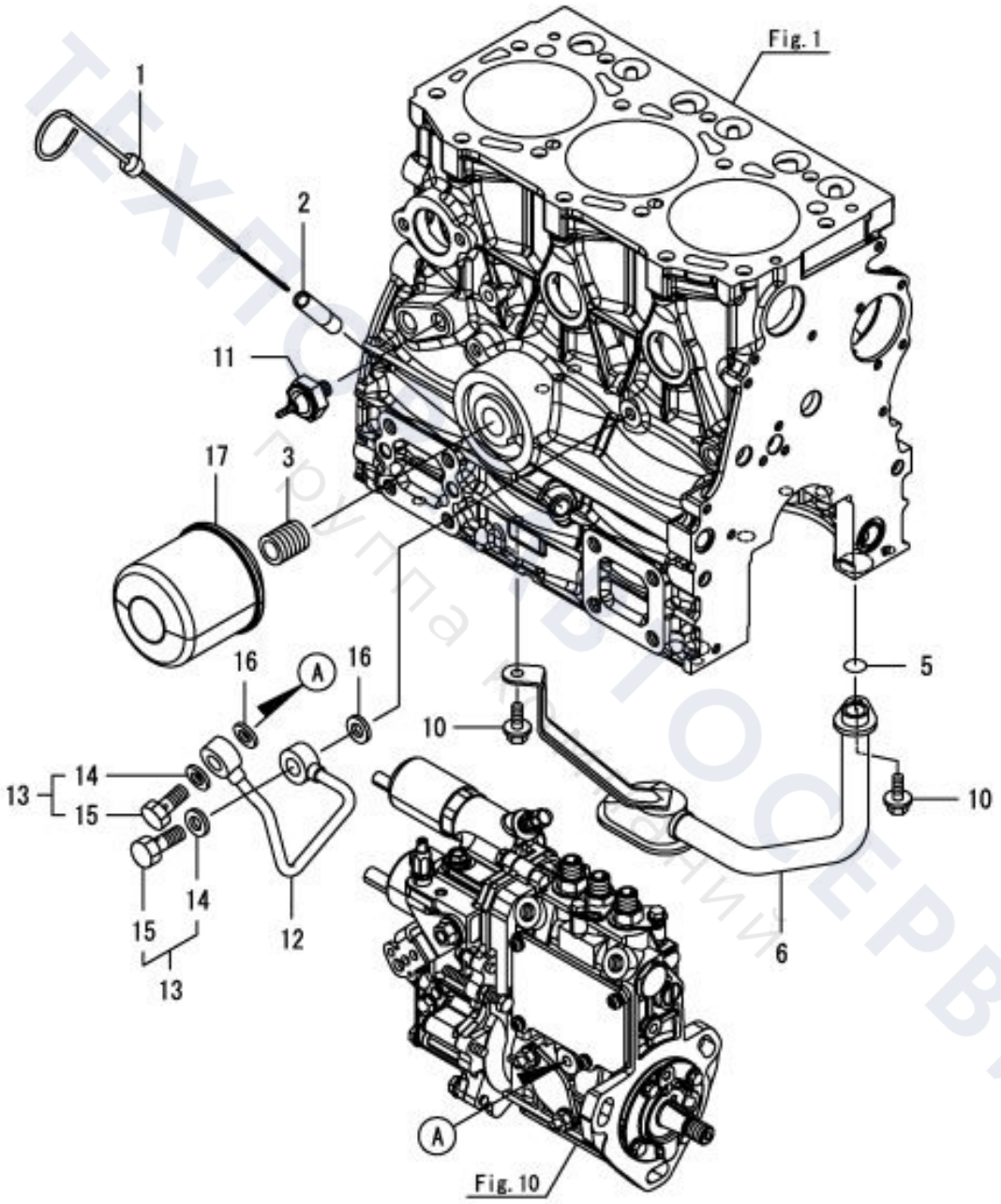
Fig. 1
1
2
11
17
3
16
A
16
5
10
10
13
14
15
14
15
13
12
6
A
Fig. 10

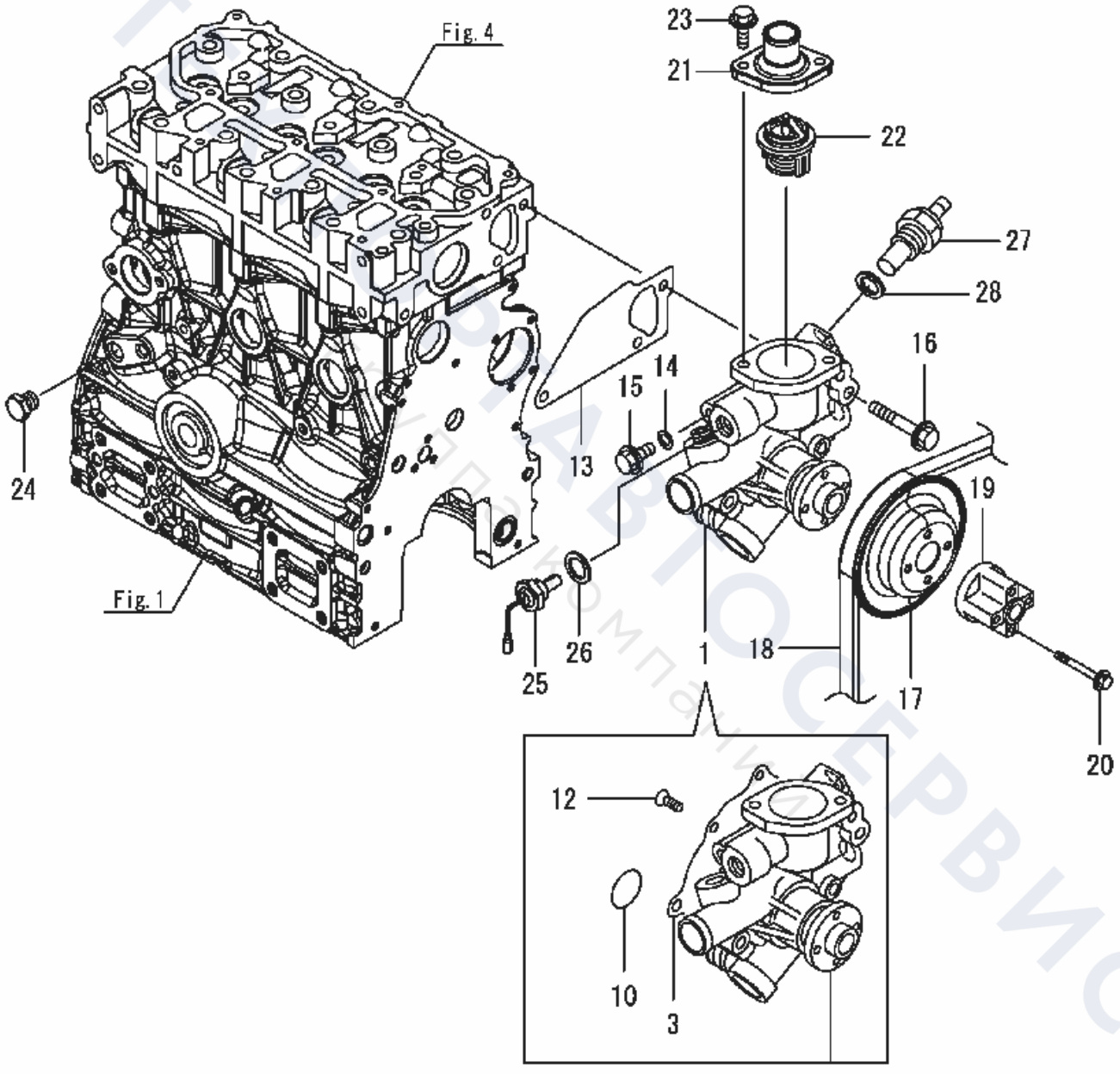
Fig. 4
Fig. 1
23
21
22
27
28
16
14
15
13
24
19
18
17
20
6
25
26
1
12
10
3

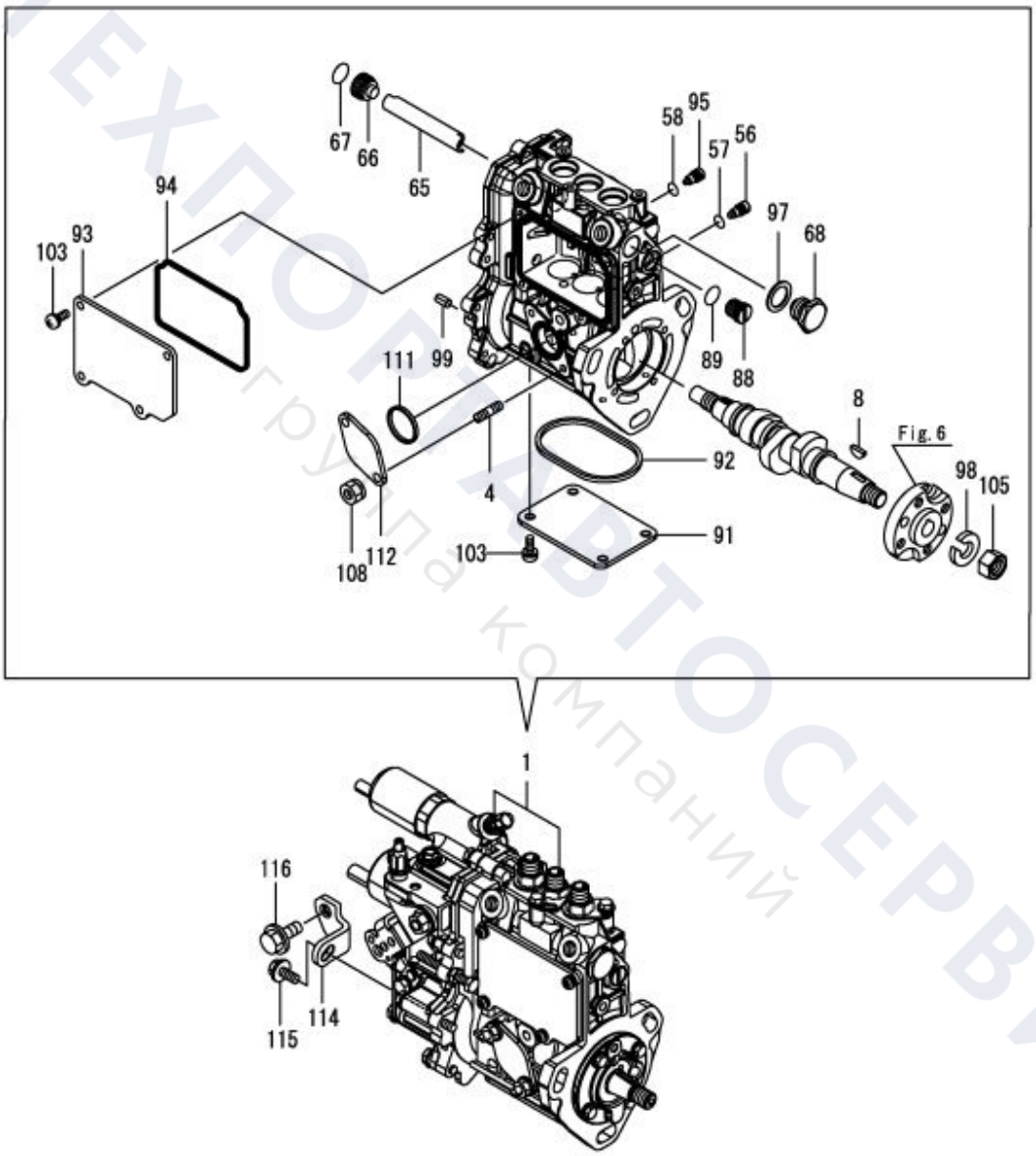
67
66
65
58
95
57
56
97
68
94
103
93
99
89
88
111
8
Fig. 6
92
98
105
4
91
108
112
103
1
116
114
115

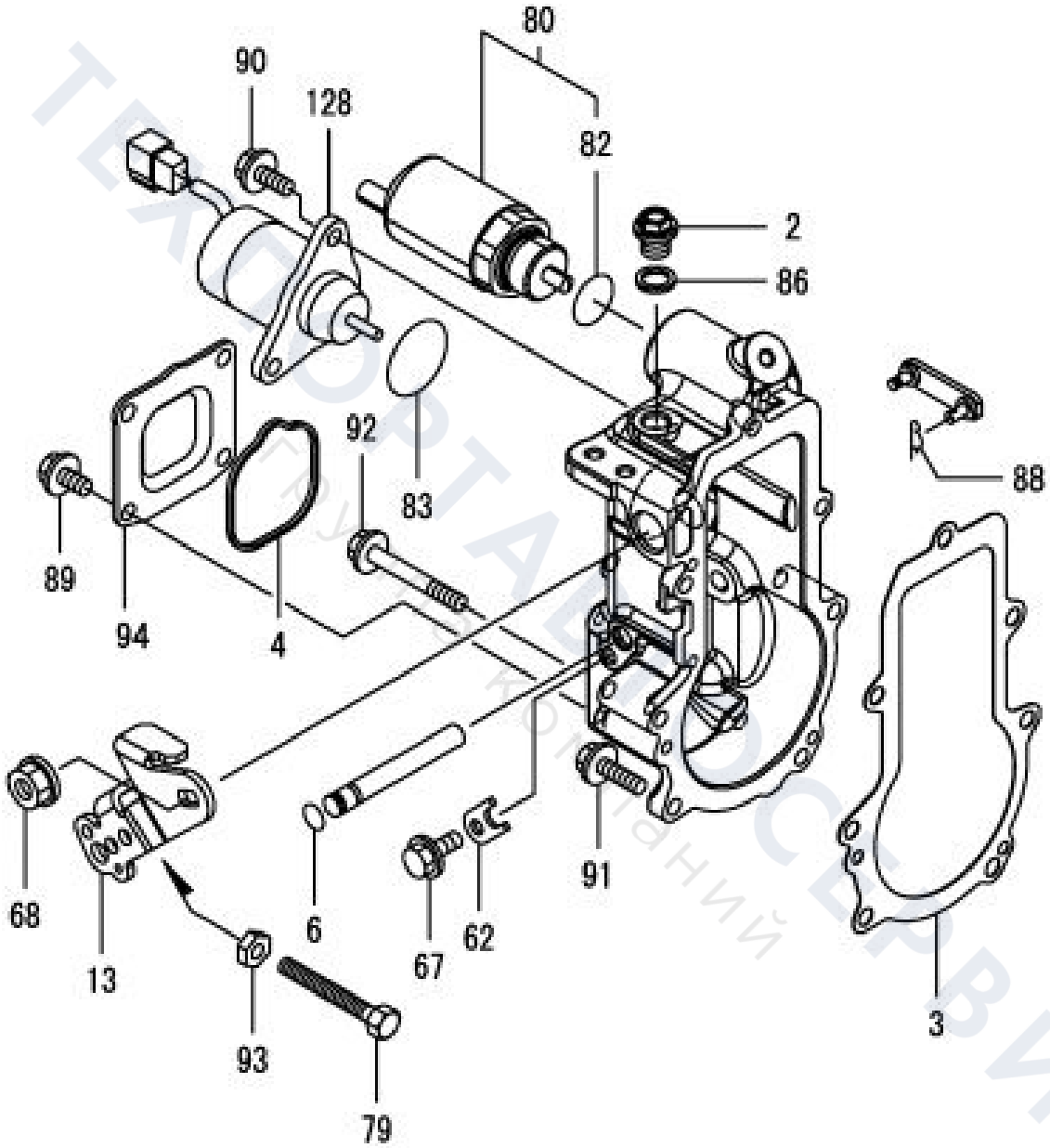
80
90
128
82
2
86
92
83
88
89
94
4
91
68
6
67
62
13
93
79
3

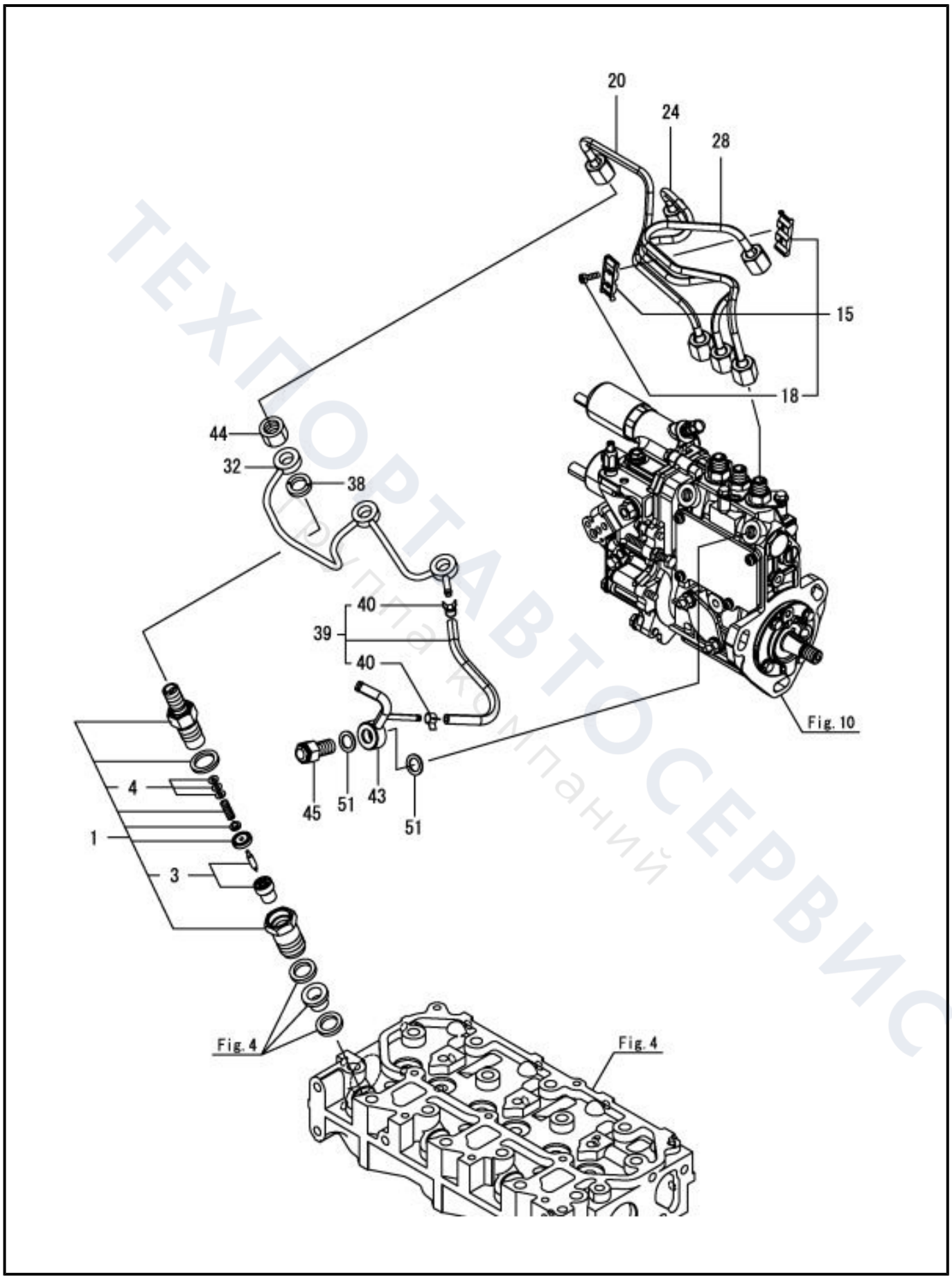
20
24
28
15
18
44
32
38
40
39
40
45
51
43
51
4
1
3
Fig. 10
Fig. 4
Fig. 4

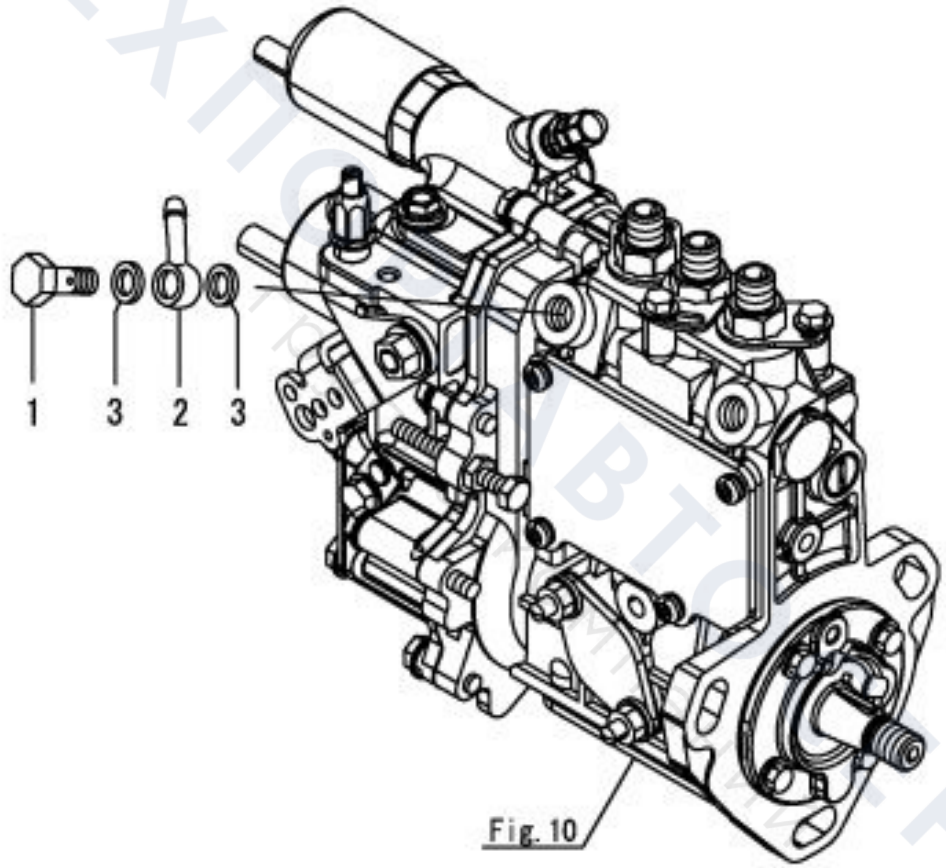

Fig. 10

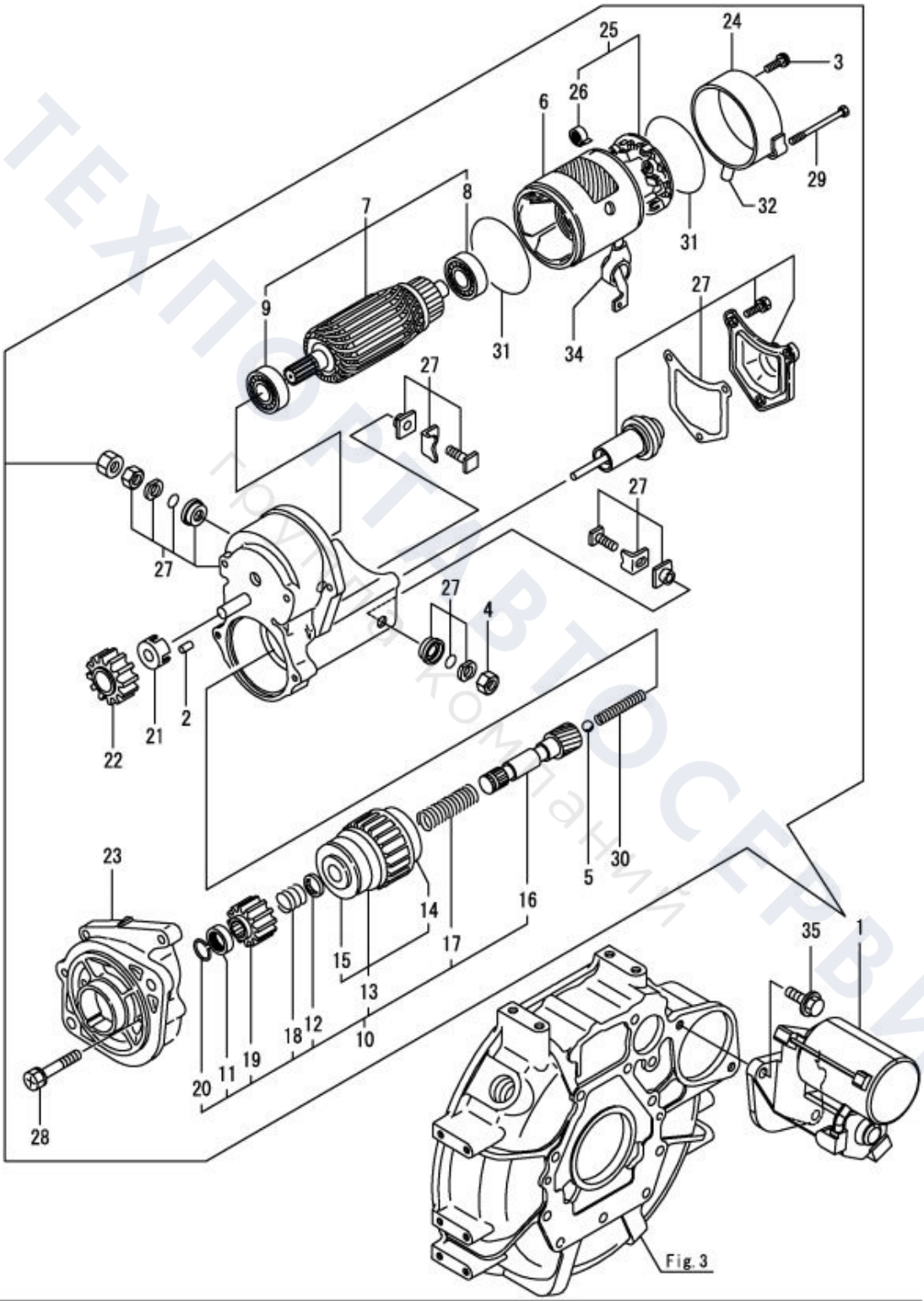
25
24
3
26
6
29
32
31
7
8
9
31
34
27
27
27
27
27
4
22
21
2
23
28
20
11
19
18
12
10
13
15
14
17
16
5
30
35
1

Fig. 3

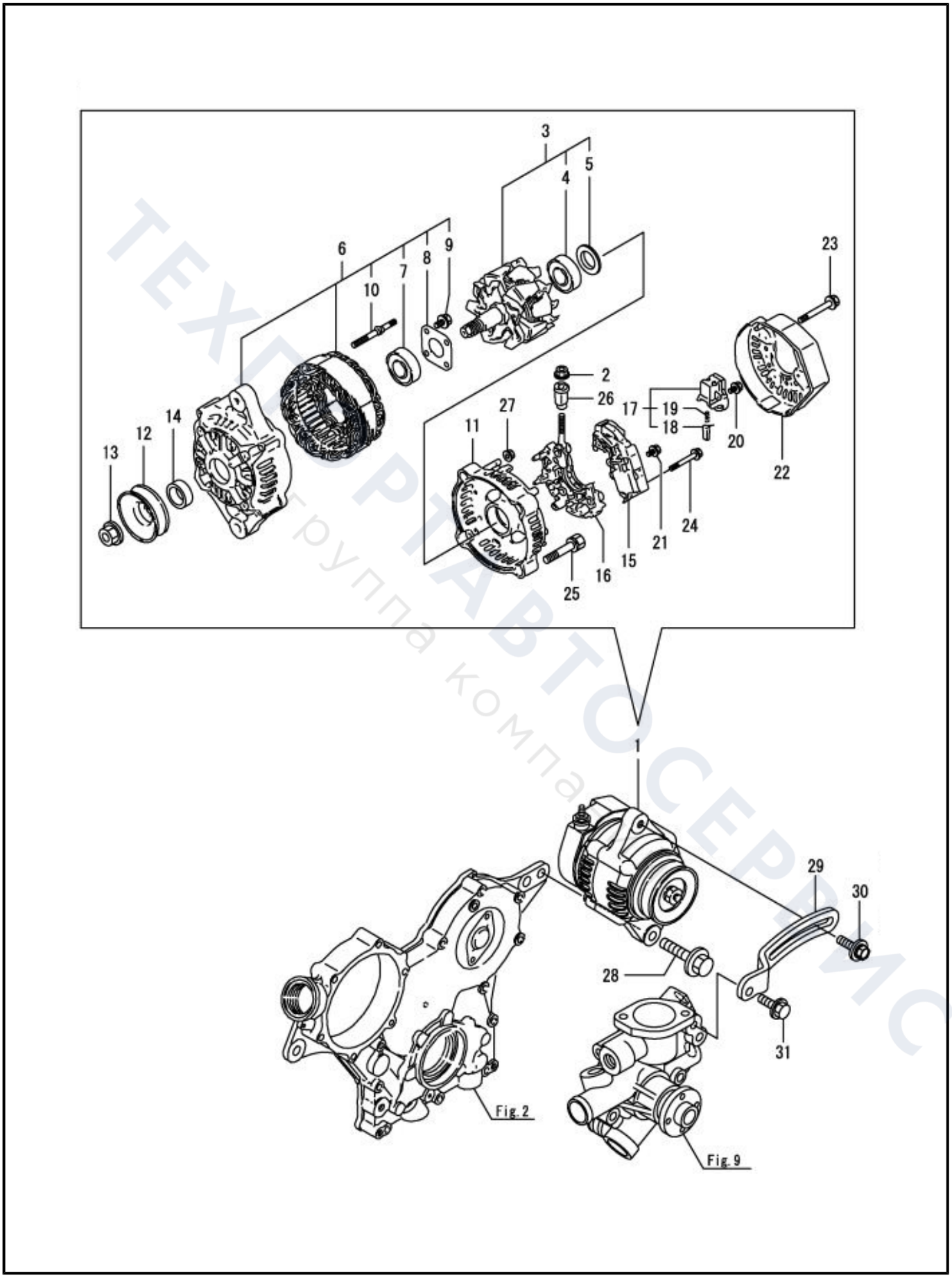
1
2
3
4
5
6
7
8
9
10
11
12
13
14
15
16
17
18
19
20
21
22
23
24
25
26
27
28
29
30
31
Fig. 2
Fig. 9

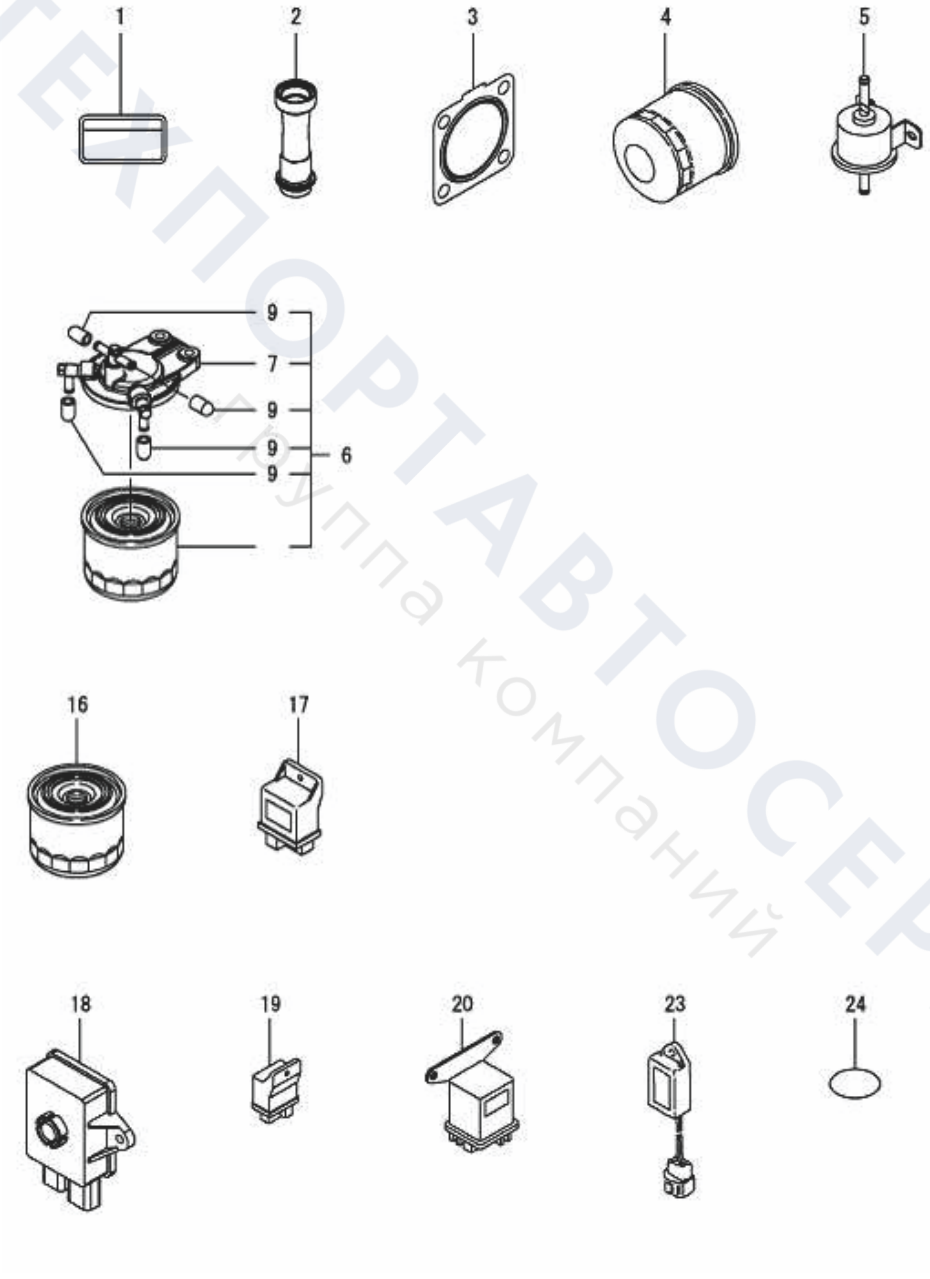

ТЕХПОРТАВТОСЕРВИС
Группа компаний

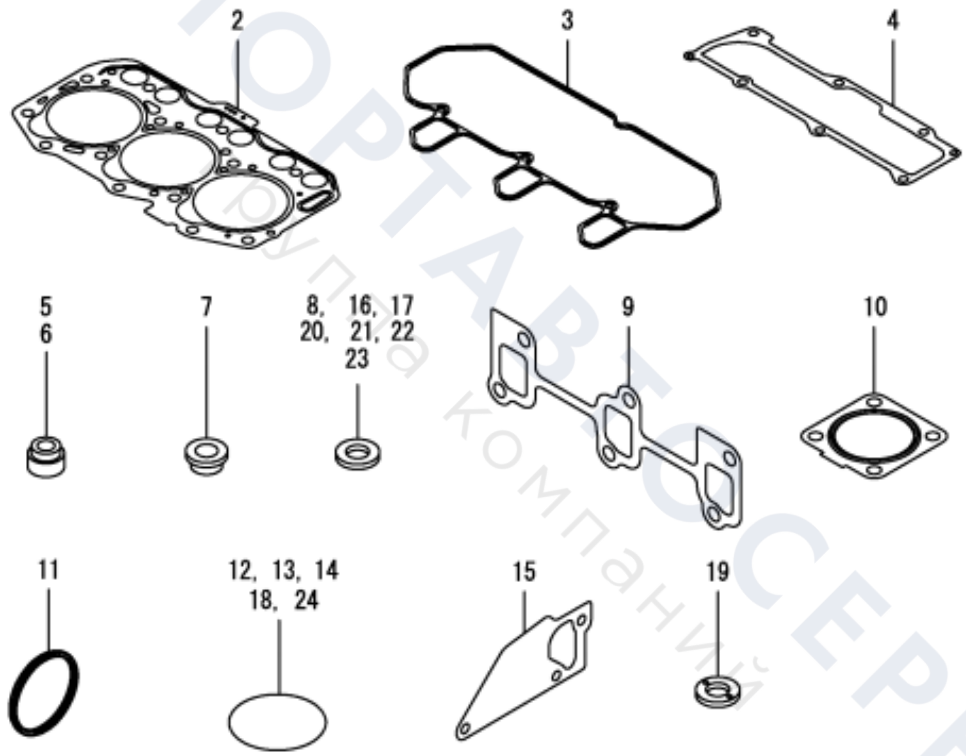

ТЕХПОРТАВТОСЕРВИС
Группа компаний